P188 TH

Thermo Pellet stove that can also release hot air into the room. Coated steel cladding and top surface in Majolica. Available in the following colours: Bianco, Bordeaux, Brunito and Grigio. Equipped with a practical shell and tube cleaning system which has rotating elements to keep it working efficiently.

GENERAL FEATURES

- Heating: hot water production - forced ventilation
- Cladding: coated steel
- Top: majolica and steel
- One-piece firebox: steel
- Boiler: steel
- Firebox: steel - Aluker®
- Fume deflector: steel
- Deflector: steel
- Exchanger cleaning: rotary cleaner system
- Brazier: steel
- Expansion tank: as standard feature
- Standard circulator pump: high efficiency
- Safety valve and relief valve: as standard feature
- Door: cast iron with ceramic glass resistant to 750°C
- Handle: steel with nickel-plated finish
- Optional flue outlet: LH side
- Standard flue outlet position: LH rear
- Function control: panel with display and digital controls
- Power adjustment: automatic with 16 levels depending on the set temperature
- Timer-controlled thermostat with programming: 6 daily time frames
- Glass cleaning: continuous air flow
- Cyclic brazier cleaning: yes
- Energy Saving: yes
- Eco Function: yes
- Frost Function: yes
- Probe for managing storage tank: as standard feature
- Probe for managing DHW storage tank: as standard feature
- Can be connected to an external thermostat: yes
- AUX control: yes
- Ash vacuum cleaner: as standard feature
- Flue gas chamber ash pan: removable
- Ventilation: optional
- Electronically-controlled anti-condensation valve: optional
- Management via SMS: optional
- Installation: flush with the wall / corner
- Flush with the wall installation: yes
- Combustion air kit: optional

TECHNICAL DETAILS

- Energy efficiency class A+
- Rated thermal power (min - max) kW 7,4 - 19,6
- Thermal efficiency (min - max) % 94,4 - 93,0
- Max operating pressure bar 1.5
- 3-bar safety discharge valve Ø 1/2"
- Heat system delivery Ø 3/4"
- Heat system return Ø 3/4"
- Rated consumption (min - max) kg/h 1,6 - 4,3
- Weight kg 210
- Standard flue outlet Ø cm 10
- Absorbed power (min - max) W 73 - 405
- Model P188 TH

COVERS

BIANCO_ BORDEAUX_ GRIGIO_

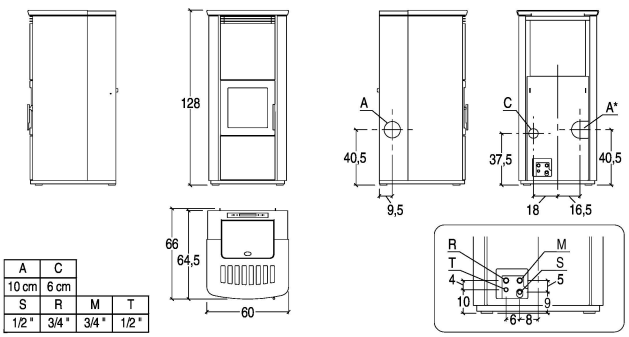

A	C
10 cm	6 cm

S	R	M	T
1/2"	3/4"	3/4"	1/2"

PIAZZETTA
PASSIONE ACCESA